# EXPLODED VIEW (UNIT)

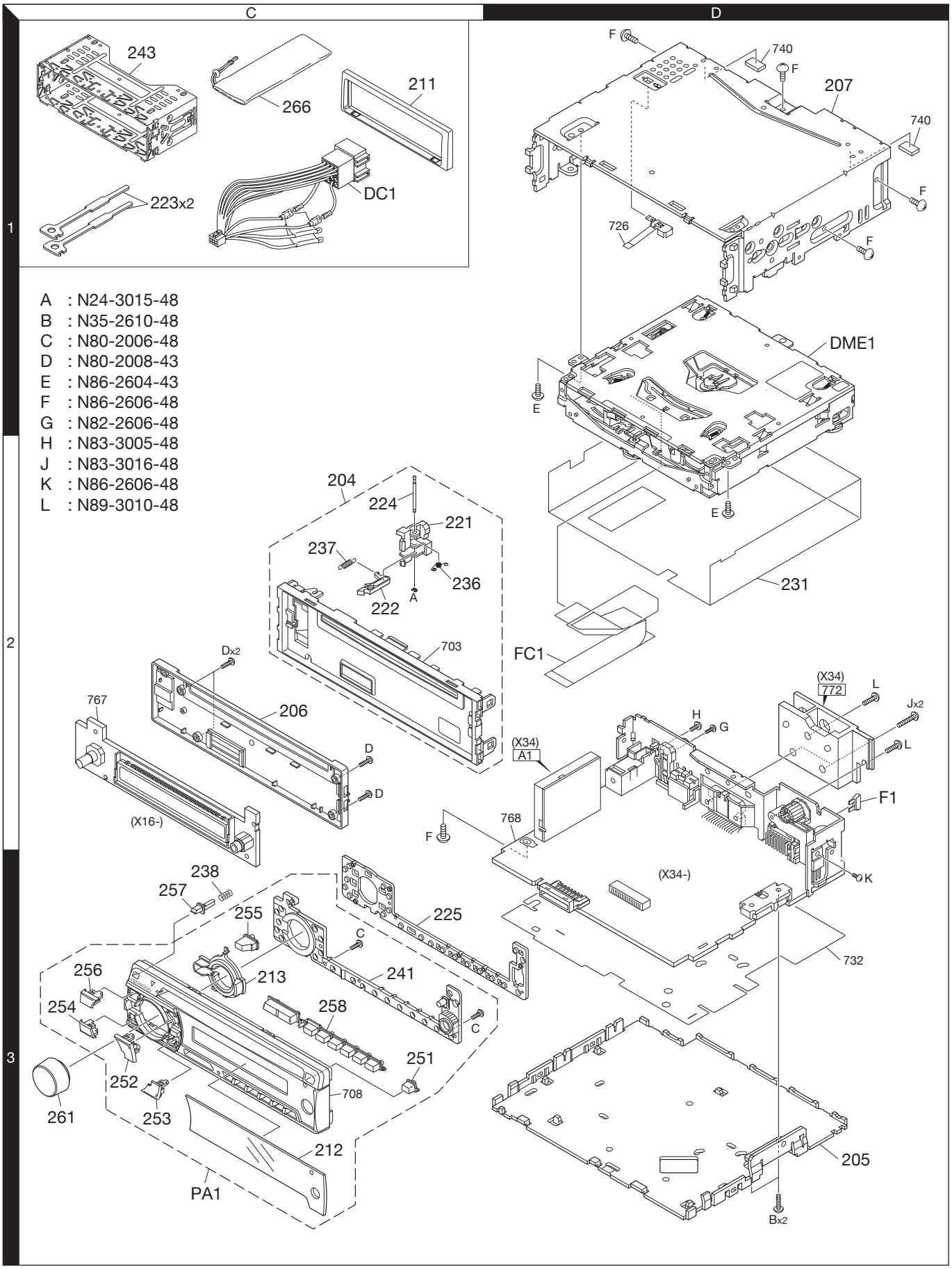


**Parts with the exploded numbers larger than 700 are not supplied.**