EXPLODED VIEW (PANEL ASSY)

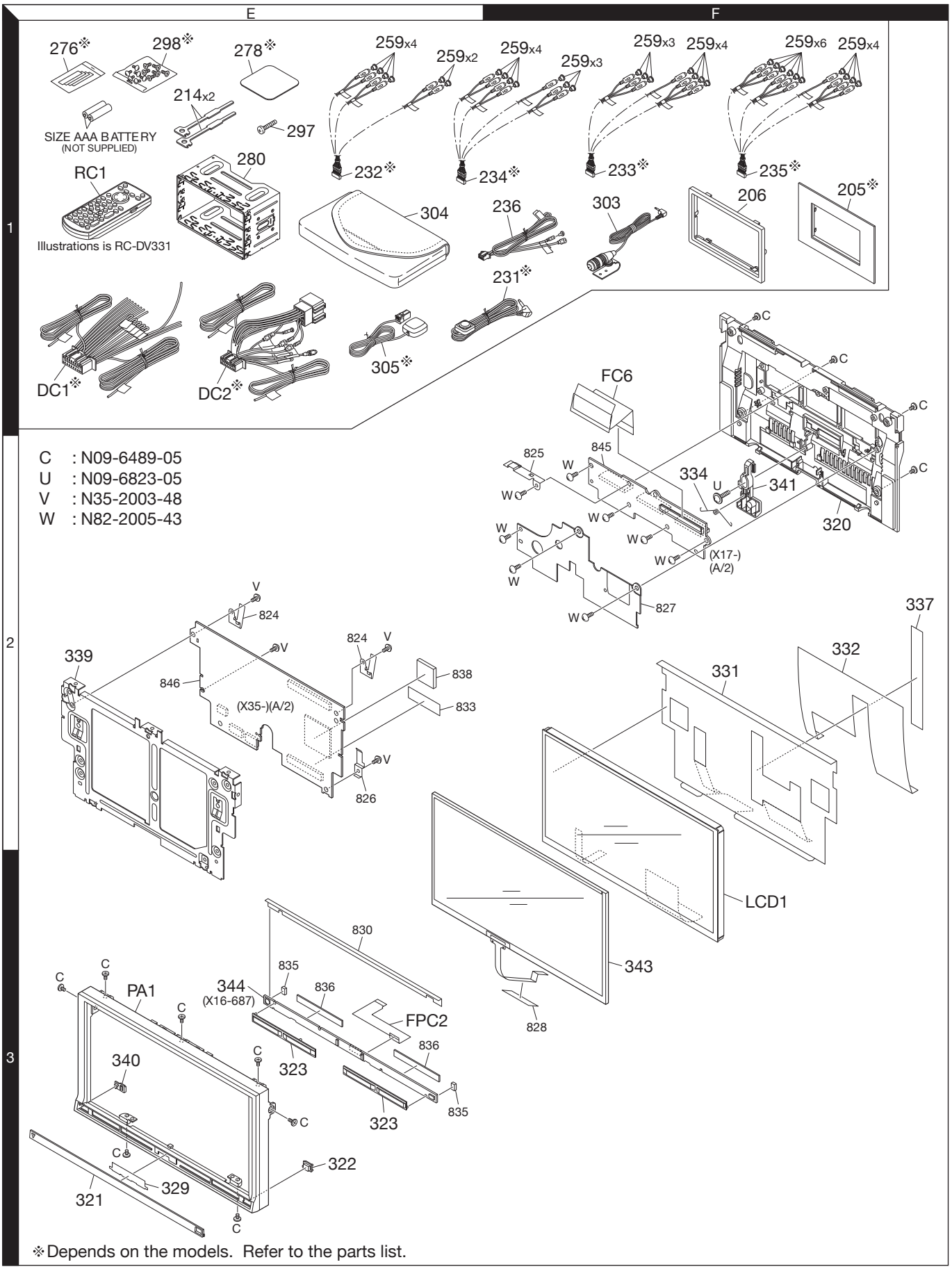

※Depends on the models. Refer to the parts list.

Parts with the exploded numbers larger than 700 are not supplied.